Cambridge International AS & A Level

Cambridge International Examinations
Cambridge International Advanced Subsidiary and Advanced Level

PHYSICS **9702/13**

Paper 1 Multiple Choice **May/June 2018**

1 hour 15 minutes

Additional Materials: Multiple Choice Answer Sheet
Soft clean eraser
Soft pencil (type B or HB is recommended)

4741131482

READ THESE INSTRUCTIONS FIRST

Write in soft pencil.
Do not use staples, paper clips, glue or correction fluid.
Write your name, Centre number and candidate number on the Answer Sheet in the spaces provided unless this has been done for you.
DO **NOT** WRITE IN ANY BARCODES.

There are **forty** questions on this paper. Answer **all** questions. For each question there are four possible answers **A**, **B**, **C** and **D**.
Choose the **one** you consider correct and record your choice in **soft pencil** on the separate Answer Sheet.

Read the instructions on the Answer Sheet very carefully.

Each correct answer will score one mark. A mark will not be deducted for a wrong answer.
Any working should be done in this booklet.
Electronic calculators may be used.

This document consists of **20** printed pages.

© UCLES 2018

Data

speed of light in free space	$c = 3.00 \times 10^{8}\,\text{m s}^{-1}$
permeability of free space	$\mu_0 = 4\pi \times 10^{-7}\,\text{H m}^{-1}$
permittivity of free space	$\varepsilon_0 = 8.85 \times 10^{-12}\,\text{F m}^{-1}$
	$\left(\frac{1}{4\pi\varepsilon_0} = 8.99 \times 10^{9}\,\text{m F}^{-1}\right)$
elementary charge	$e = 1.60 \times 10^{-19}\,\text{C}$
the Planck constant	$h = 6.63 \times 10^{-34}\,\text{J s}$
unified atomic mass unit	$1\,\text{u} = 1.66 \times 10^{-27}\,\text{kg}$
rest mass of electron	$m_\text{e} = 9.11 \times 10^{-31}\,\text{kg}$
rest mass of proton	$m_\text{p} = 1.67 \times 10^{-27}\,\text{kg}$
molar gas constant	$R = 8.31\,\text{J K}^{-1}\,\text{mol}^{-1}$
the Avogadro constant	$N_\text{A} = 6.02 \times 10^{23}\,\text{mol}^{-1}$
the Boltzmann constant	$k = 1.38 \times 10^{-23}\,\text{J K}^{-1}$
gravitational constant	$G = 6.67 \times 10^{-11}\,\text{N m}^2\,\text{kg}^{-2}$
acceleration of free fall	$g = 9.81\,\text{m s}^{-2}$

© UCLES 2018

Formulae

uniformly accelerated motion	$s = ut + \frac{1}{2}at^2$ $v^2 = u^2 + 2as$
work done on/by a gas	$W = p\Delta V$
gravitational potential	$\phi = -\frac{Gm}{r}$
hydrostatic pressure	$p = \rho gh$
pressure of an ideal gas	$p = \frac{1}{3}\frac{Nm}{V}\langle c^2 \rangle$
simple harmonic motion	$a = -\omega^2 x$
velocity of particle in s.h.m.	$v = v_0 \cos \omega t$ $v = \pm\omega\sqrt{(x_0^2 - x^2)}$
Doppler effect	$f_o = \frac{f_s v}{v \pm v_s}$
electric potential	$V = \frac{Q}{4\pi\varepsilon_0 r}$
capacitors in series	$1/C = 1/C_1 + 1/C_2 + \ldots$
capacitors in parallel	$C = C_1 + C_2 + \ldots$
energy of charged capacitor	$W = \frac{1}{2}QV$
electric current	$I = Anvq$
resistors in series	$R = R_1 + R_2 + \ldots$
resistors in parallel	$1/R = 1/R_1 + 1/R_2 + \ldots$
Hall voltage	$V_H = \frac{BI}{ntq}$
alternating current/voltage	$x = x_0 \sin \omega t$
radioactive decay	$x = x_0 \exp(-\lambda t)$
decay constant	$\lambda = \frac{0.693}{t_{\frac{1}{2}}}$

© UCLES 2018

1 What is the best way of describing a physical quantity?

A a quantity with a magnitude and a direction but no unit

B a quantity with a magnitude and a unit

C a quantity with a magnitude but no direction

D a quantity with a unit but no magnitude

2 Which pair includes a vector quantity and a scalar quantity?

A displacement and acceleration

B force and kinetic energy

C power and speed

D work and potential energy

3 A force F acts at an angle θ to the horizontal.

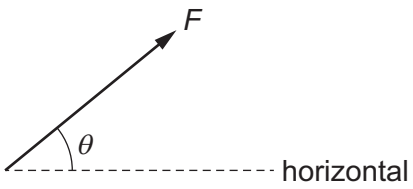

What are the horizontal and the vertical components of the force?

	horizontal component	vertical component
A	$F\cos\theta$	$F\cos(90° - \theta)$
B	$F\cos\theta$	$F\sin(90° - \theta)$
C	$F\sin\theta$	$F\cos\theta$
D	$F\sin\theta$	$F\cos(90° - \theta)$

4 What will reduce the systematic errors when taking a measurement?

A adjusting the needle on a voltmeter so that it reads zero when there is no potential difference across it

B measuring the diameter of a wire at different points and taking the average

C reducing the parallax effects by using a marker and a mirror when measuring the amplitude of oscillation of a pendulum

D timing 20 oscillations, rather than a single oscillation, when finding the period of a pendulum

© UCLES 2018

5 In an experiment to determine the Young modulus E of the material of a wire, the measurements taken are shown.

mass hung on end of wire	$m = 2.300 \pm 0.002\,\text{kg}$
original length of wire	$l = 2.864 \pm 0.005\,\text{m}$
diameter of wire	$d = 0.82 \pm 0.01\,\text{mm}$
extension of wire	$e = 7.6 \pm 0.2\,\text{mm}$

The Young modulus is calculated using

$$E = \frac{4mgl}{\pi d^2 e}$$

where g is the acceleration of free fall.

The calculated value of E is $1.61 \times 10^{10}\,\text{N m}^{-2}$.

How should the calculated value of E and its uncertainty be expressed?

A $(1.61 \pm 0.04) \times 10^{10}\,\text{N m}^{-2}$

B $(1.61 \pm 0.05) \times 10^{10}\,\text{N m}^{-2}$

C $(1.61 \pm 0.07) \times 10^{10}\,\text{N m}^{-2}$

D $(1.61 \pm 0.09) \times 10^{10}\,\text{N m}^{-2}$

6 A rock on the surface of Mars is projected vertically upwards with an initial speed of $9.4\,\text{m s}^{-1}$. The rock rises to a height of 12 m above the surface.

Assume there is no atmosphere on Mars.

What is the acceleration of free fall near the surface of Mars?

A $0.39\,\text{m s}^{-2}$ **B** $3.7\,\text{m s}^{-2}$ **C** $7.4\,\text{m s}^{-2}$ **D** $9.8\,\text{m s}^{-2}$

© UCLES 2018

7 Two masses, *M* and *m*, are connected by an inextensible string which passes over a frictionless pulley. Mass *M* rests on a frictionless slope, as shown.

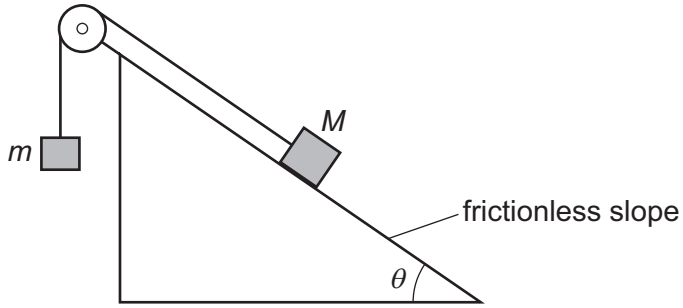

The slope is at an angle θ to the horizontal.

The two masses are initially held stationary and then released. Mass *M* moves down the slope.

Which expression **must** be correct?

A $\sin\theta < \frac{m}{M}$ **B** $\cos\theta < \frac{m}{M}$ **C** $\sin\theta > \frac{m}{M}$ **D** $\cos\theta > \frac{m}{M}$

8 A sky-diver falls from a stationary balloon at time $t = 0$. As the sky-diver falls, her speed and the air resistance increase until the force of the air resistance is equal to her weight.

Which graph best shows the variation with time *t* of the displacement *s* for the motion of the sky-diver?

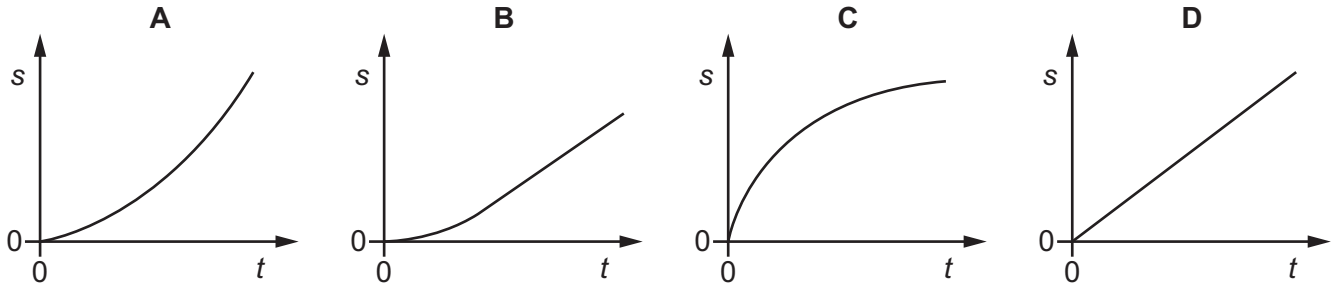

9 A ball of mass 0.20 kg, travelling in the *x*-direction at a speed of 0.50 m s^{-1}, collides with a ball of mass 0.30 kg travelling in the *y*-direction at a speed of 0.40 m s^{-1}.

The two balls stick together after the collision, travelling at an angle θ to the *x*-direction.

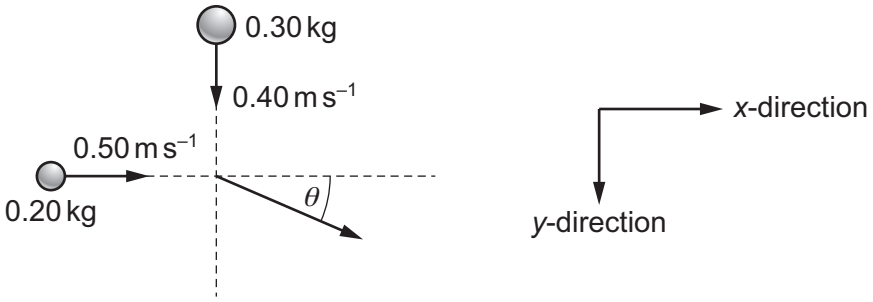

What is the value of θ?

A 39° **B** 40° **C** 50° **D** 51°

10 Four cuboids with identical lengths, breadths and heights are immersed in water. The cuboids are held at the same depth and in identical orientations by vertical rods, as shown.

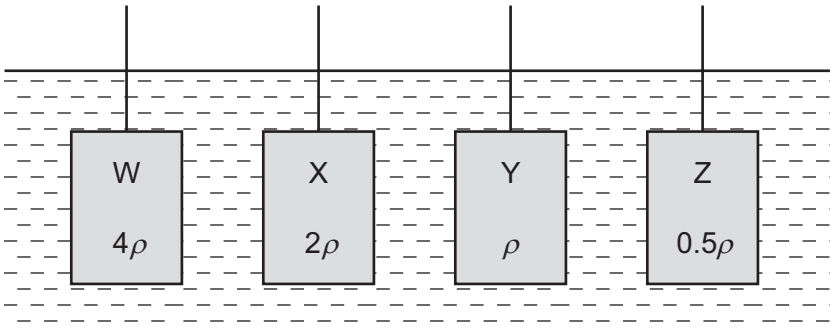

Water has density ρ.
Cuboid W is made of material of density 4ρ.
Cuboid X is made of material of density 2ρ.
Cuboid Y is made of material of density ρ.
Cuboid Z is made of material of density 0.5ρ.

Which statement is correct?

A The upthrust of the water on each of the cuboids is the same.

B The upthrust of the water on W is twice the upthrust of the water on X.

C The upthrust of the water on X is twice the upthrust of the water on W.

D The upthrust of the water on Y is zero.

© UCLES 2018

11 A rectangular block of lead of density $1.13 \times 10^4\,\text{kg m}^{-3}$ has sides of length 12.0 cm, 15.0 cm and 10.0 cm.

What is the maximum pressure the block can exert when resting on a table?

A 1.13 kPa **B** 1.70 kPa **C** 11.1 kPa **D** 16.6 kPa

12 Which diagram shows a couple formed by two forces, each of magnitude *F*, acting on a rod?

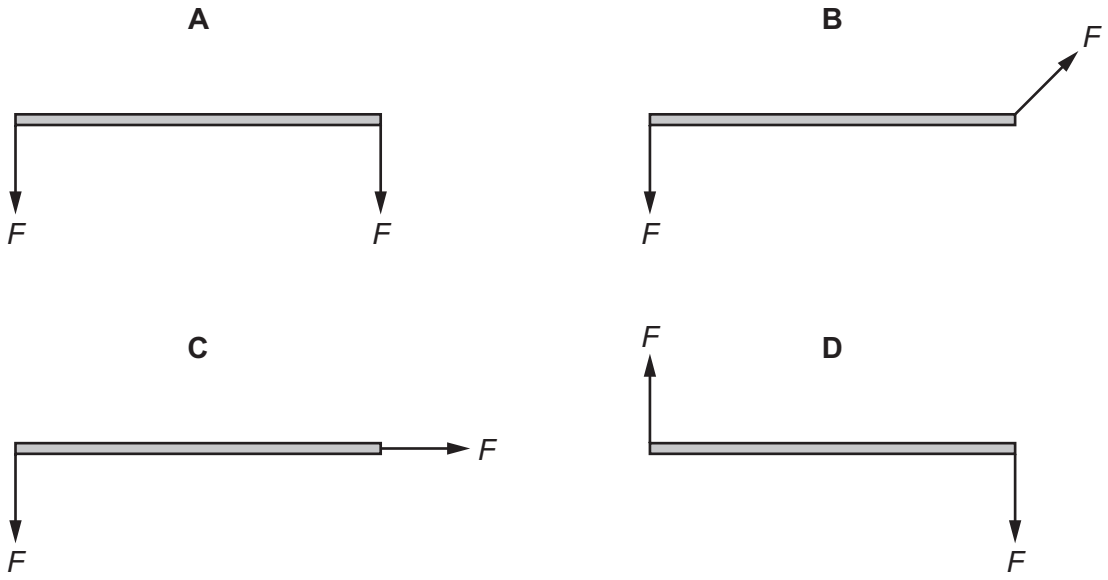

13 Full-fat milk is made up of fat-free milk mixed with fat.

A volume of $1.000 \times 10^{-3}\,\text{m}^3$ of full-fat milk has a mass of 1.035 kg. It contains 4.00% fat by volume.

The density of fat-free milk is $1.040 \times 10^3\,\text{kg m}^{-3}$.

What is the density of fat?

A $1.25 \times 10^2\,\text{kg m}^{-3}$

B $9.15 \times 10^2\,\text{kg m}^{-3}$

C $9.28 \times 10^2\,\text{kg m}^{-3}$

D $1.16 \times 10^3\,\text{kg m}^{-3}$

© UCLES 2018

14 Gas is trapped inside a cylinder by a piston of cross-sectional area *A*. The piston is **not** frictionless.

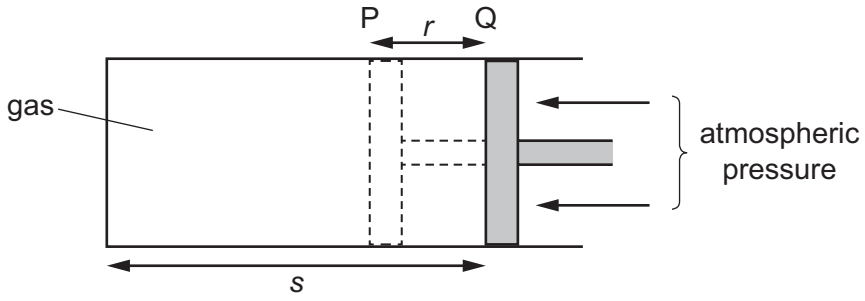

The gas is heated and this causes it to expand, pushing back the piston through distance *r* from position P to position Q. The length of the gas column is then *s*.

Which expression represents the amount of work done by the gas against the atmosphere during this expansion?

A (atmospheric pressure) × *Ar*

B (atmospheric pressure) × *As*

C (pressure inside the gas) × *Ar*

D (pressure inside the gas) × *As*

15 Water from a reservoir is fed to the turbine of a hydroelectric system at a rate of 510 kg s^{-1}. The reservoir is 280 m above the level of the turbine.

The electrical output from the generator driven by the turbine is a current of 205 A at a potential difference of 5800 V.

What is the efficiency of the system?

A 8.3% **B** 12% **C** 83% **D** 85%

© UCLES 2018

16 A ball is thrown vertically up into the air. It rises to the top of its path before beginning to fall vertically downwards.

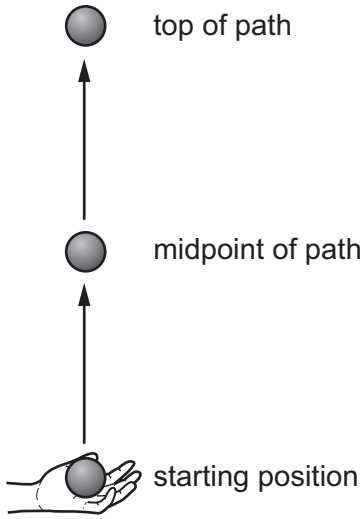

Assume that the gravitational potential energy of the ball is zero at its starting position.

Which statement about the ball is **not** correct?

A As it rises, its kinetic energy is transferred to gravitational potential energy.

B At the midpoint of its path, its gravitational potential energy is equal to its initial kinetic energy.

C At the top of its path, its kinetic energy is zero.

D At the top of its path, its total energy is less than its initial total energy.

17 A force of 1000 N is needed to lift the hook of a crane at a constant velocity. The crane is then used to lift a load of mass 1000 kg at a constant velocity of $0.50\,\text{m}\,\text{s}^{-1}$.

What is the power needed to lift the hook and the load?

A 4.9 kW **B** 5.4 kW **C** 20 kW **D** 22 kW

18 Data for a steel wire on an electric guitar are listed.

diameter = 5.0×10^{-4} m

Young modulus = 2.0×10^{11} Pa

tension = 20 N

The wire snaps and contracts elastically. Assume the wire obeys Hooke's law.

By what percentage does the length l of a piece of the wire contract?

A 1.3×10^{-4} % **B** 5.1×10^{-4} % **C** 1.3×10^{-2} % **D** 5.1×10^{-2} %

© UCLES 2018

19 The graph shows how the extension of a spring varies with the force used to stretch it.

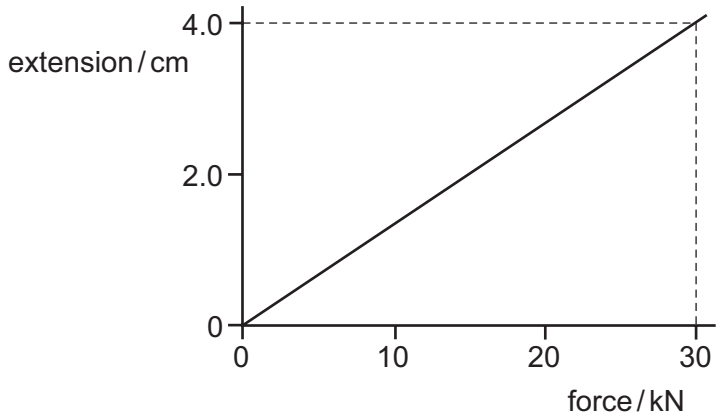

What is the strain energy in the spring when the extension is 4.0 cm?

A 60 J **B** 120 J **C** 600 J **D** 1200 J

20 The displacement-distance graph for a transverse progressive wave is shown.

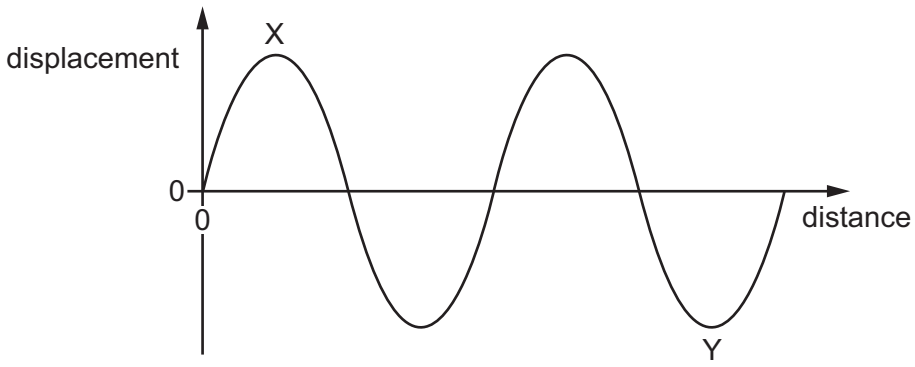

The phase difference between points X and Y can be expressed as $(180n)°$.

What is the value of n?

A 1.5 **B** 2.5 **C** 3.0 **D** 6.0

© UCLES 2018

21 The four graphs represent a progressive wave on a stretched string. Graphs **A** and **B** show how the displacement *d* varies with distance *x* along the string at one instant. Graphs **C** and **D** show how the displacement *d* varies with time *t* at a particular value of *x*.

The labels on the graphs are intended to show the wavelength λ, the period *T* and the amplitude *a* of the wave, but only one graph is correctly labelled.

Which graph is correctly labelled?

A

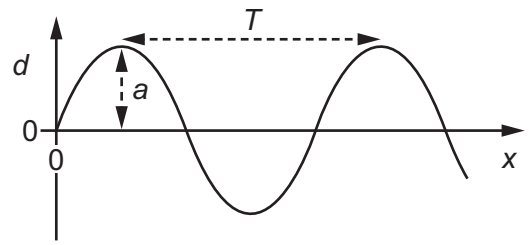

B

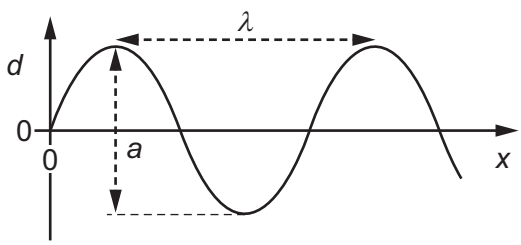

C

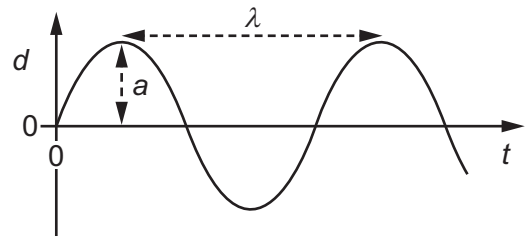

D

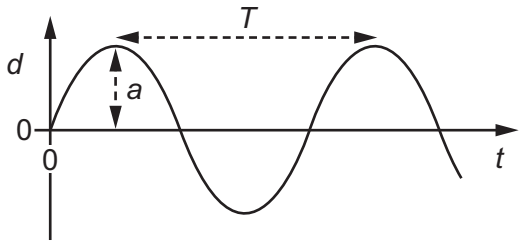

22 A cathode-ray oscilloscope (c.r.o.) is used to determine the frequency of a sound wave.

The diagram shows the waveform on the screen.

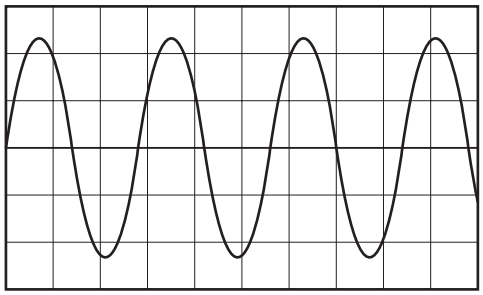

The time-base setting is 5.0 ms / div.

What is the frequency of the sound wave?

A 57 Hz **B** 71 Hz **C** 114 Hz **D** 143 Hz

© UCLES 2018

23 A police car travels at a velocity of 30.0 m s^{-1} directly towards a stationary observer. The horn of the car emits sound of frequency 2000 Hz. The speed of sound is 340 m s^{-1}.

What is the frequency of the sound heard by the observer?

A 1840 Hz **B** 2000 Hz **C** 2180 Hz **D** 2190 Hz

24 A vibrating tuning fork is held over a measuring cylinder, as shown.

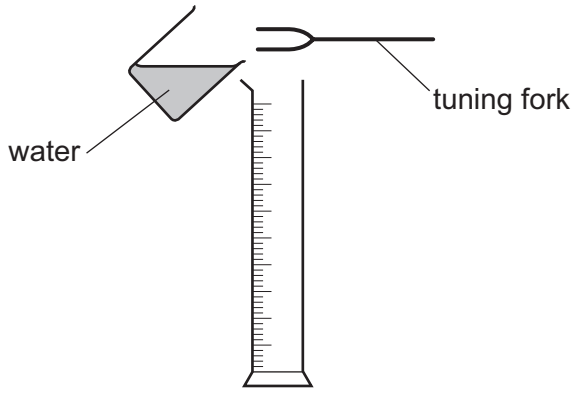

Water is then gradually poured into the measuring cylinder. A much louder sound is first heard when the water level is 2.9 cm above the base of the measuring cylinder. A second much louder sound is heard when the water level reaches a height of 67.3 cm above the base.

The speed of sound in air is 330 m s^{-1}.

What is the frequency of the tuning fork?

A 128 Hz **B** 256 Hz **C** 512 Hz **D** 1024 Hz

25 A water wave in a ripple tank is diffracted as it passes through a gap in a barrier.

Which two factors affect the angle of diffraction of the wave?

A the amplitude and frequency of the incident wave

B the amplitude of the incident wave and the width of the gap

C the wavelength and amplitude of the incident wave

D the wavelength of the incident wave and the width of the gap

26 A double-slit interference pattern using red light of wavelength 7.0×10^{-7} m has a fringe spacing of 3.5 mm.

Which fringe spacing would be observed for the same arrangement of apparatus but using blue light of wavelength 4.5×10^{-7} m?

A 2.3 mm **B** 3.5 mm **C** 5.4 mm **D** 9.0 mm

© UCLES 2018

27 Two parallel metal plates are situated 20 cm apart in a vacuum. They are connected to two sources of potential difference as shown.

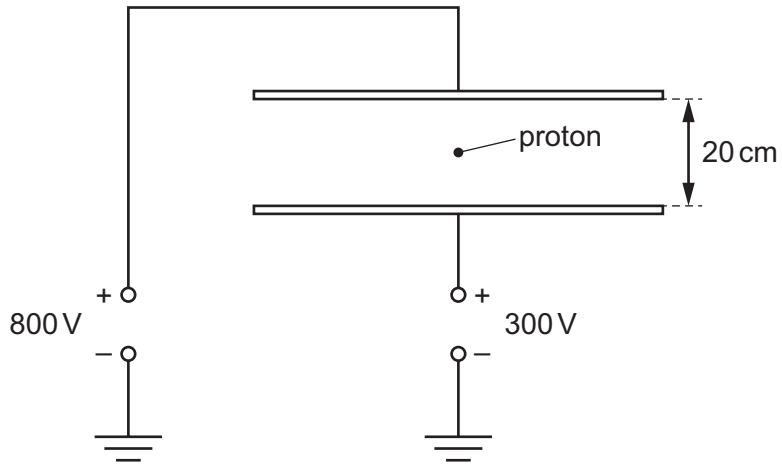

A proton is released in the space between the plates.

What is the magnitude and direction of the acceleration of the proton?

A $2.4 \times 10^{11}\,\text{m s}^{-2}$ downwards

B $2.4 \times 10^{11}\,\text{m s}^{-2}$ upwards

C $5.3 \times 10^{11}\,\text{m s}^{-2}$ downwards

D $5.3 \times 10^{11}\,\text{m s}^{-2}$ upwards

28 A particle having mass m and charge $+q$ enters a uniform electric field with speed v.

Initially, the particle is travelling at right-angles to the electric field.

During its movement through the field, the particle is deflected through distance d, as shown.

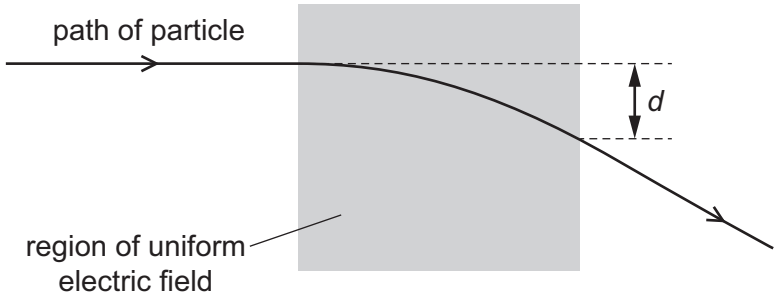

A second particle of mass $2m$, charge $+q$ and speed v enters the electric field along the same path.

What is the distance through which this particle is deflected in the electric field?

A $\frac{d}{4}$ **B** $\frac{d}{2}$ **C** $2d$ **D** $4d$

© UCLES 2018

29 What is a possible charge on a particle?

A $6.40 \times 10^{-20}\,\text{C}$

B $4.00 \times 10^{-19}\,\text{C}$

C $1.12 \times 10^{-18}\,\text{C}$

D $9.11 \times 10^{-18}\,\text{C}$

30 A slice of germanium of cross-sectional area $1.0\,\text{cm}^2$ carries a current of $56\,\mu\text{A}$. The number density of charge carriers in the germanium is $2.0 \times 10^{13}\,\text{cm}^{-3}$. Each charge carrier has a charge equal to the charge on an electron.

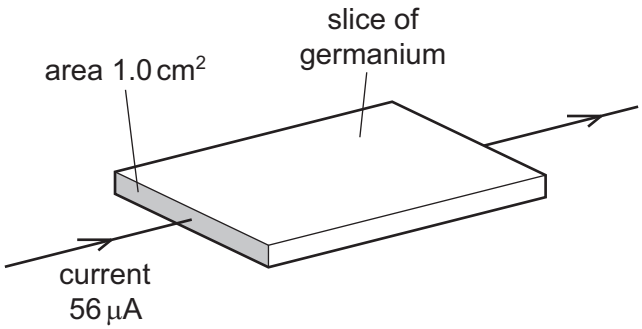

What is the average drift velocity of the charge carriers in the germanium?

A $0.18\,\text{m s}^{-1}$ **B** $18\,\text{m s}^{-1}$ **C** $180\,\text{m s}^{-1}$ **D** $1800\,\text{m s}^{-1}$

31 A cell of electromotive force (e.m.f.) E and internal resistance r is connected to an external resistor of resistance R, as shown.

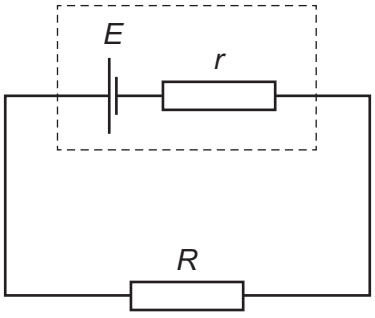

What is the power dissipated in the external resistor?

A $\dfrac{E^2(R+r)}{R^2}$ **B** $\dfrac{E^2R}{(R+r)^2}$ **C** $\dfrac{E^2(R+r)}{r^2}$ **D** $\dfrac{E^2r}{(R+r)^2}$

32 The graph shows the I-V characteristic of an electrical component.

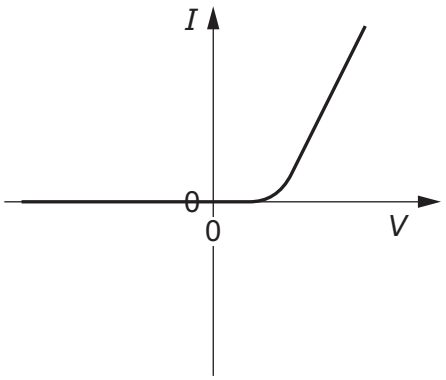

What is the component?

A a filament lamp

B a metallic conductor at constant temperature

C a resistor

D a semiconductor diode

33 A metal wire of length 1.4 m has a uniform cross-sectional area of $7.8 \times 10^{-7}\,\text{m}^2$.

The resistivity of the metal is $1.7 \times 10^{-8}\,\Omega\,\text{m}$.

What is the resistance of the wire?

A $0.016\,\Omega$ **B** $0.031\,\Omega$ **C** $33\,\Omega$ **D** $64\,\Omega$

© UCLES 2018

34 A battery of electromotive force (e.m.f.) 6.0 V and negligible internal resistance is connected to three resistors each of resistance 6.0 Ω.

Which circuit will produce a current through the battery of 0.67 A?

A

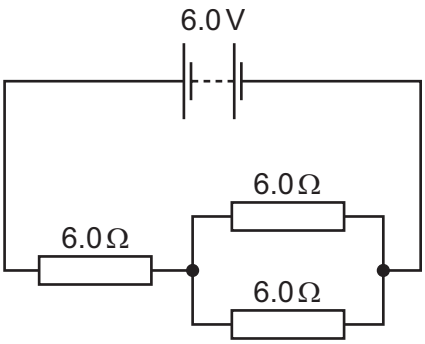

B

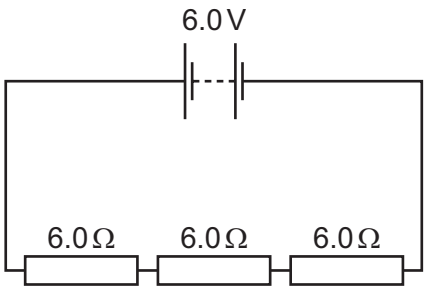

C

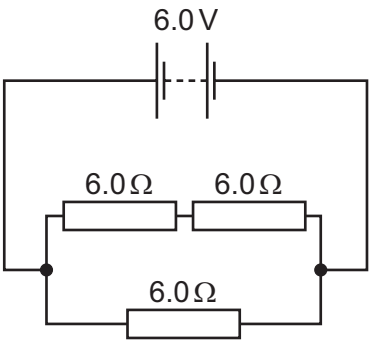

D

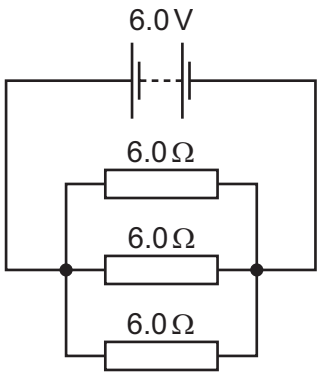

© UCLES 2018

[Turn over

35 The diagram shows a network of three resistors. Two of these, marked R, are identical. The other resistor has a resistance of 5.0 Ω.

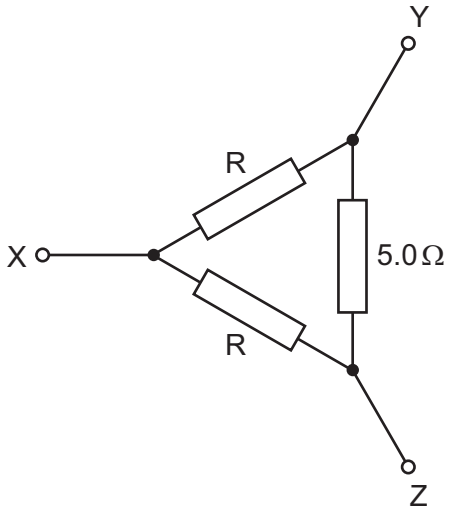

The resistance between Y and Z is found to be 2.5 Ω.

What is the resistance between X and Y?

A 0.30 Ω **B** 0.53 Ω **C** 1.9 Ω **D** 3.3 Ω

36 The diagram shows a battery, a fixed resistor, an ammeter and a variable resistor connected in series.

A voltmeter is connected across the fixed resistor.

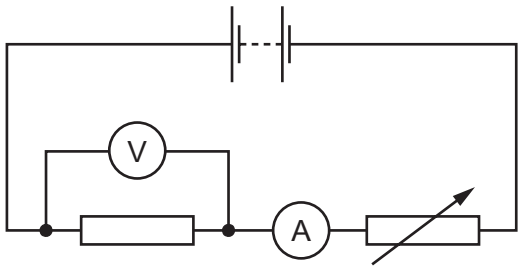

The resistance of the variable resistor is reduced.

Which row describes the changes in the readings of the ammeter and of the voltmeter?

	ammeter	voltmeter
A	decrease	decrease
B	decrease	increase
C	increase	decrease
D	increase	increase

© UCLES 2018

37 The circuit diagram shows a battery of electromotive force (e.m.f.) 9.0 V and negligible internal resistance. It is connected to two resistors of resistances 160 Ω and *R*. The output potential difference V_{out} is 4.0 V.

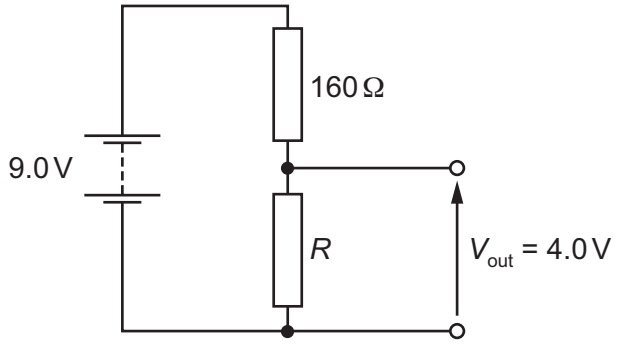

What is the resistance *R*?

A 32 Ω **B** 49 Ω **C** 71 Ω **D** 128 Ω

38 In the circuit shown, XY is a length *L* of uniform resistance wire. A potential difference is applied across XY. R_1 and R_2 are unknown resistors. J is a sliding contact that joins the junction of R_1 and R_2 to points on XY through a lamp S.

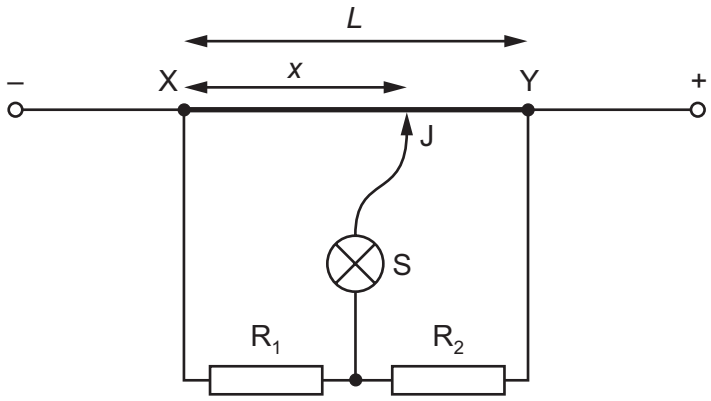

J is moved along XY to a point at which the lamp is off. This point is at a distance *x* from X.

The potential difference across R_1 is V_1 and the potential difference across R_2 is V_2.

What is the value of the ratio $\frac{V_1}{V_2}$?

A $\frac{L}{x}$ **B** $\frac{x}{L}$ **C** $\frac{L-x}{x}$ **D** $\frac{x}{L-x}$

39 A nucleus of magnesium-23 undergoes β^+ decay, as represented by the nuclear equation shown.

$$^{23}_{12}\text{Mg} \rightarrow \text{X} + \beta^+ + \nu_e$$

What is nucleus X?

A $^{22}_{11}\text{Na}$ **B** $^{22}_{13}\text{A}l$ **C** $^{23}_{11}\text{Na}$ **D** $^{23}_{13}\text{A}l$

40 Which list contains only leptons?

A electron, neutrino, positron

B electron, neutrino, proton

C electron, proton, neutron

D neutrino, neutron, positron

Permission to reproduce items where third-party owned material protected by copyright is included has been sought and cleared where possible. Every reasonable effort has been made by the publisher (UCLES) to trace copyright holders, but if any items requiring clearance have unwittingly been included, the publisher will be pleased to make amends at the earliest possible opportunity.

To avoid the issue of disclosure of answer-related information to candidates, all copyright acknowledgements are reproduced online in the Cambridge International Examinations Copyright Acknowledgements Booklet. This is produced for each series of examinations and is freely available to download at www.cie.org.uk after the live examination series.

Cambridge International Examinations is part of the Cambridge Assessment Group. Cambridge Assessment is the brand name of University of Cambridge Local Examinations Syndicate (UCLES), which is itself a department of the University of Cambridge.

© UCLES 2018